Rexroth
Bosch Group

4/2 and 4/3 proportional directional valves, direct operated, with electrical position feedback, without/with integrated electronics (OBE)

RE 29061/11.12 1/22
Replaces: 05.12

Type 4WRE and 4WREE

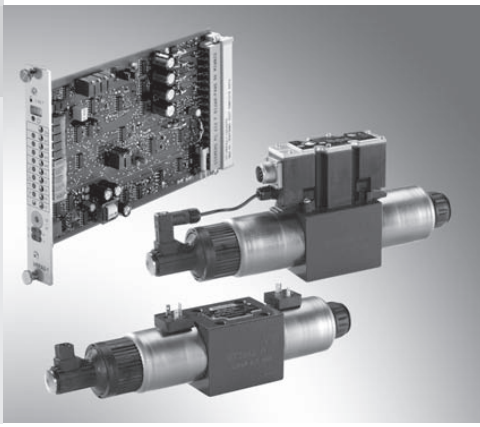

Size 6 and 10
Component series 2X
Maximum operating pressure 315 bar
Maximum flow: 80 l/min (size 6)
180 l/min (size 10)

Table of contents

Information on available spare parts:
www.boschrexroth.com/spc

Features

- Direct operated proportional directional valve with electrical position feedback and integrated electronics (OBE) with type 4WREE
- Control of flow direction and size
- Operation by means of proportional solenoids with central thread and detachable coil
- For subplate mounting: Porting pattern according to ISO 4401
- Spring-centered control spool
- Control electronics
  - Type 4WREE:
    integrated electronics (OBE) with voltage or current input (A1 and/or F1)
  - Type 4WRE (4/3 version), separate order:
    - digital and analog amplifier in Euro-card format
    - analog amplifier in modular design
  - Type 4WRE…A (4/2 version), separate order:
    - analog amplifier in modular design

Ordering code

4WRE | | | | –2X/ G24 | / | V | *

Without integrated electronics (OBE) **= no code**
With integrated electronics (OBE) **= E**

Size 6 **= 6**
Size 10 **= 10**

Control spool symbols

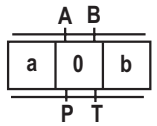

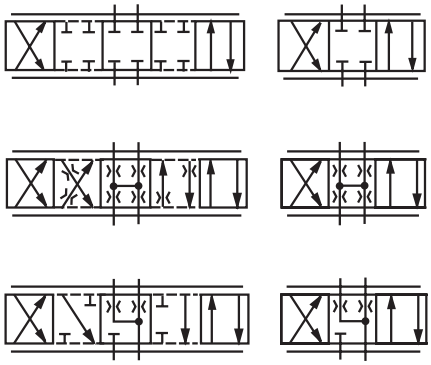

= E
E1–

= V
V1–

= W
W1–

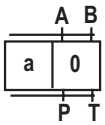

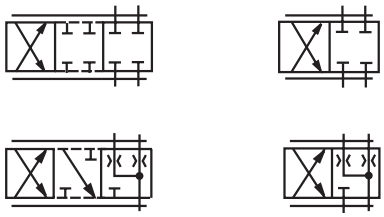

= EA

= WA

With symbol E1–, V1– and W1–:
P → A: $q_{V\,max}$ B → T: $q_V/2$
P → B: $q_V/2$ A → T: $q_{V\,max}$

Notice:
In the zero position, spools W and WA have a connection from A to T and B to T with approx. 3 % of the relevant nominal cross-section.

Further details in the plain text

Seal material
V = FKM seals [1)]

Electronic interface
A1 = Command value ±10 V
F1 = Command value 4 to 20 mA
no code = Type 4WRE

Electrical connection
Type 4WRE:
K4 = **Without** mating connector, with connector according to DIN EN 175301-803
Mating connector (solenoid, position transducer), separate order, see page 8
Type 4WREE:
K31 = **Without** mating connector, with connector according to DIN EN 175201-804
Mating connector – separate order, see page 9

Supply voltage
G24 = Direct voltage 24 V

2X = 20 to 29
(20 to 29: unchanged installation and connection dimensions)

Rated flow at valve pressure differential Δp = 10 bar
Size 6
04 = 4 l/min
08 = 8 l/min
16 = 16 l/min
32 = 32 l/min
Size 10
25 = 25 l/min
50 = 50 l/min
75 = 75 l/min

[1)] Design SO660 with NBR seals at the valve connection surface

Symbols

Proportional directional valve without integrated electronics

Type 4WRE…

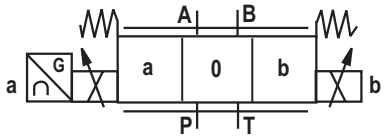

Type 4WRE…**A**…

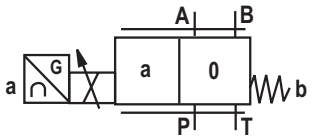

Proportional directional valve with integrated electronics

Type 4WREE…

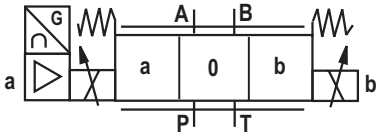

Type 4WREE…**A**…

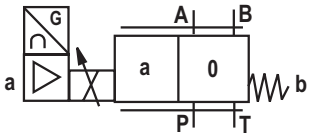

Function, section

Type 4WRE …-2X/…

The 4/2 and 4/3 proportional directional valves are designed as direct operated devices in plate design. Operation is effected by proportional solenoids with central thread and detachable coil. The solenoids are controlled by external electronics.

Set-up:

The valve basically consists of:

- Housing (1) with connection surface
- Control spool (2) with compression springs (3 and 4) and spring plate (5 and 6)
- Solenoids (7 and 8) with central thread
- Position transducer (9)

☞ **Important note!**

The PG fitting (11) must not be opened. Mechanical adjustment of the adjustment nut located below is prohibited and damages the valve!

Function:

- With de-energized solenoids (7 and 8), central position of the control spool (2) by compression springs (3 and 4) between spring plates (5 and 6)
- Direct operation of the control spool (2) by controlling a proportional solenoid, e.g. solenoid "b" (8)
  - → Displacement of the control spool (2) to the left proportional to the electric input signal
  - → Connection from P to A and B to T via orifice-type cross-sections with progressive flow characteristic
- Switching off of the solenoid (8)
  - → The compression spring (3) brings the control spool (2) back into the central position

In the de-energized condition, the control spool (2) is held in a mechanical central position by the return springs. With control spool symbol "V", this position does not correspond to the hydraulic central position! When the electric valve control loop is closed, the control spool is positioned in the hydraulic central position.

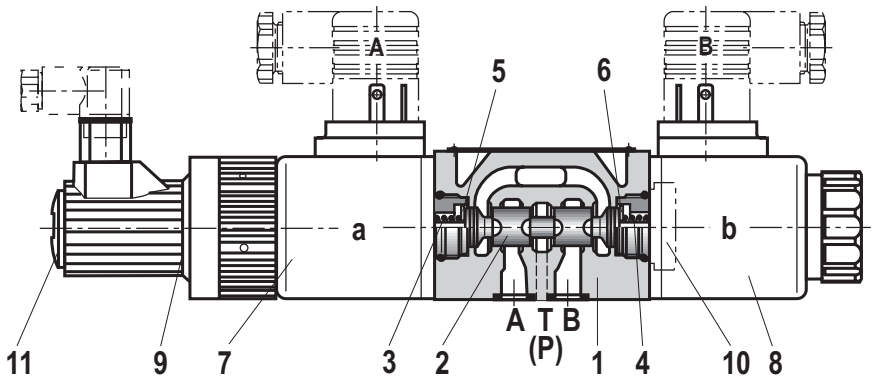

Valve with 2 spool positions: (Type 4WRE…**A**…)

The function of this valve design basically corresponds to the valve with three spool positions. The 2 spool position valves are, however, only equipped with solenoid "a" (7). Instead of the 2nd proportional solenoid, there is a plug screw (10).

☞ **Notice!**

Due to the design principle, internal leakage is inherent to the valves, which may increase over the life cycle.

☞ **Notice!**

The tank line must not be allowed to run empty. With corresponding installation conditions, a pre-charge valve (pre-charging pressure approx. 2 bar) is to be installed.

Function, section

Type 4WREE …-2X/…

The 4/2 and 4/3 proportional directional valves are designed as direct operated devices in plate design. Operation is effected by proportional solenoids with central thread and detachable coil. The solenoids are controlled by the internal electronics.

Set-up:

The valve basically consists of:

- Housing (1) with connection surface
- Control spool (2) with compression springs (3 and 4) and spring plate (5 and 6)
- Solenoids (7 and 8) with central thread
- Position transducer (9)
- Integrated electronics (13)
- Electric zero point adjustment (12) accessible via Pg7

☞ **Important note!**

The PG fitting (11) must not be opened. Mechanical adjustment of the adjustment nut located below is prohibited and damages the valve!

Function:

- With de-energized solenoids (7 and 8), central position of the control spool (2) by compression springs (3 and 4) between spring plates (5 and 6)
- Direct operation of the control spool (2) by controlling a proportional solenoid, e.g. solenoid "b" (8)
  - → Displacement of the control spool (2) to the left proportional to the electric input signal
  - → Connection from P to A and B to T via orifice-type cross-sections with progressive flow characteristic
- Switching off of the solenoid (8)
  - → The compression spring (3) brings the control spool (2) back into the central position

In the de-energized condition, the control spool (2) is held in a mechanical central position by the return springs. With control spool symbol "V", this position does not correspond to the hydraulic central position! When the electric valve control loop is closed, the control spool is positioned in the hydraulic central position.

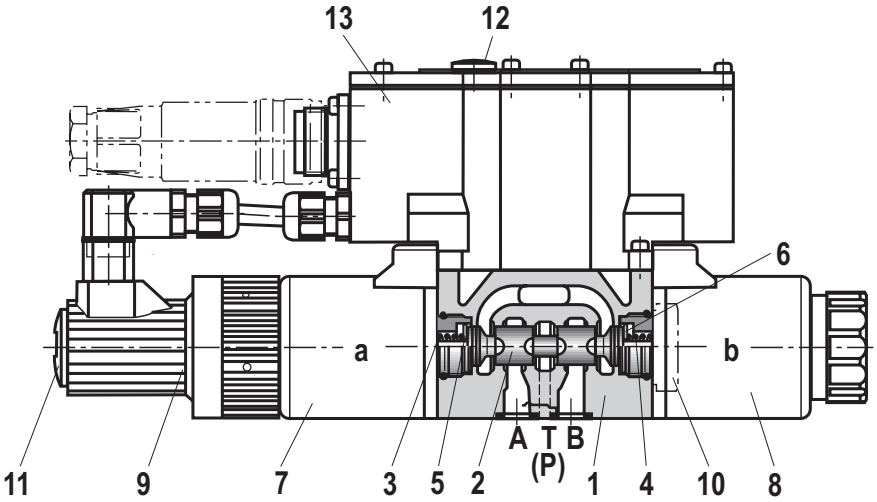

Valve with 2 spool positions: (Type 4WREE…**A**…)

The function of this valve design basically corresponds to the valve with three spool positions. The 2 spool position valves are, however, only equipped with solenoid "a" (7). Instead of the 2nd proportional solenoid, there is a plug screw (10).

☞ **Notice!**

Due to the design principle, internal leakage is inherent to the valves, which may increase over the life cycle.

☞ **Notice!**

The tank line must not be allowed to run empty. With corresponding installation conditions, a pre-charge valve (pre-charging pressure approx. 2 bar) is to be installed.

Technical data (For applications outside these parameters please consult us!)

general

Sizes		Size	6	10
Weight	– Type 4WRE	kg	2.2	6.3
	– Type 4WREE	kg	2.4	6.5
Installation position			Any, preferably horizontal	
Ambient temperature range	– Type 4WRE	°C	–20 to +70	
	– Type 4WREE	°C	–20 to +50	
Storage temperature range		°C	–20 to +80	
$MTTF_d$ values according to EN ISO 13849		Years	150 [1] (for more information see data sheet 08012)	

hydraulic (measured with HLP46, ϑ_{Oil} = 40 °C ± 5 °C and p = 100 bar)

Maximum operating pressure	– Port A, B, P	bar	315	
	– Port T	bar	210	
Rated flow $q_{V\ rated}$ with Δp = 10 bar		l/min	4, 8, 16, 32	25, 50, 75
Recommended maximum flow		l/min	80	180
Hydraulic fluid			See table below	
Hydraulic fluid temperature range		°C	–20 to +80 (preferably +40 to +50)	
Viscosity range		mm^2/s	20 to 380 (preferably 30 to 46)	
Maximum admissible degree of contamination of the hydraulic fluid, cleanliness class according to ISO 4406 (c)			Class 20/18/15 [2]	
Hysteresis		%	≤ 0.1	
Range of inversion		%	≤ 0.05	
Response sensitivity		%	≤ 0.05	
Zero shift upon change of hydraulic fluid temperature and operating pressure		%/10 K	≤ 0.15	
		%/100 bar	≤ 0.1	

[1] With control spool types E, E1, EA, W, W1, WA; in longitudinal control spool direction, there is sufficient positive overlap without shock/vibration load; observe the installation orientation with regard to the main direction of acceleration.

[2] The cleanliness classes specified for the components must be adhered to in hydraulic systems. Effective filtration prevents faults and at the same time increases the service life of the components.
For the selection of the filters see www.boschrexroth.com/filter

Hydraulic fluid		Classification	Suitable sealing materials	Standards
Mineral oils and related hydrocarbons		HL, HLP	NBR, FKM	DIN 51524
Flame-resistant	– Containing water	HFC (Fuchs HYDROTHERM 46M, Petrofer Ultra Safe 620)	NBR	ISO 12922

☞ **Important information on hydraulic fluids!**

- For more information and data on the use of other hydraulic fluids refer to data sheet 90220 or contact us!
- There may be limitations regarding the technical valve data (temperature, pressure range, service life, maintenance intervals, etc.)!
- The flash point of the process and operating medium used must be 40 K higher than the maximum solenoid surface temperature.
- **Flame-resistant – water-containing**: Maximum pressure differential per control edge 175 bar. Pressure pre-loading at the tank port > 20 % of the pressure differential; otherwise, increased cavitation.

  Life cycle as compared to operation with mineral oil HL, HLP 50 % to 100 %.

Technical data (For applications outside these parameters please consult us!)

electric

Size		Size	6	10
Voltage type			Direct voltage	
Solenoid coil resistance	– Cold value at 20 °C	Ω	2.65	4.55
	– Maximum hot value	Ω	4.05	6.82
Duty cycle		%	100	
Maximum coil temperature [1]		°C	up to 150	
Electrical connection see page 8 and 9	– Type 4WRE		With connector according to DIN EN 175301-803 and ISO 4400	
			Mating connector according to DIN EN 175301-803 and ISO 4400 [2]	
	– Type 4WREE		With connector DIN EN 175201-804	
			Mating connector DIN EN 175201-804 [2]	
Protection class of the valve according to EN 60529			IP65 with mating connector mounted and locked	

Control electronics

Type 4WRE	4/3 version			
	Amplifier in euro-card format [2]	Digital	VT-VRPD-2-2X/V0/0 according to RE 30126	
		Analog	VT-VRPA2-1-1X/V0 according to data sheet 30119	VT-VRPA2-2-1X/V0 according to data sheet 30119
	Module amplifier [2]	Analog	VT-MRPA2-1 according to data sheet 30219	VT-MRPA2-2 according to data sheet 30219
Type 4WRE…A…	4/2 version			
	Module amplifier [2]	Analog	VT-MRPA1-1 according to data sheet 30219	VT-MRPA1-2 according to data sheet 30219
Type 4WREE			Integrated in the valve, see page 9	
	analog command value module		VT- SWMA-1-1X/... according to data sheet 29902	
	analog command value module		VT-SWMAK-1-1X/... according to data sheet 29903	
	analog command value card		VT-SWKA-1-1X/... according to data sheet 30255	
	digital command value card		VT-HACD -1-1X/... according to data sheet 30143	
Supply voltage	Nominal voltage	VDC	24	
	lower limit value	V	19.4	
	upper limit value	V	35	
Current consumption of the amplifier	I_{max}	A	< 2	
	Pulse current	A	3	

[1] Due to the temperatures occurring at the surfaces of the solenoid coils, the European standards ISO 13732-1 and EN ISO 4413 need to be adhered to!

[2] Separate order

☞ **Notice:** For information on the **environmental simulation testing** for the areas EMC (electromagnetic compatibility), climate and mechanical load see data sheet 29061-U (declaration on environmental compatibility).

Electrical connection, mating connectors (dimensions in mm)

Type 4WRE (**without** integrated electronics)

Connection to connector

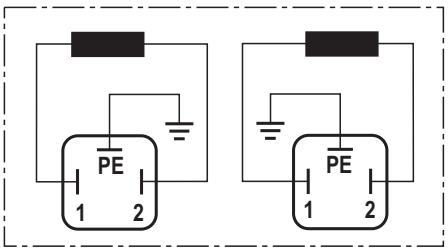

Connection to mating connector

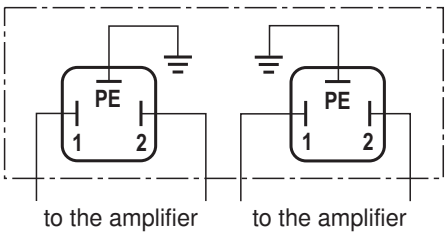

Mating connector CECC 75 301-803-A002FA-H3D08-G
according to DIN EN 175301-803 and ISO 4400

Solenoid **a**, color gray
separate order under the Material no. **R901017010**

Solenoid **b**, color black
separate order under the Material no. **R901017011**

1 Mounting screw M3
Tightening torque M_A = 0.5 Nm + 0.1 Nm

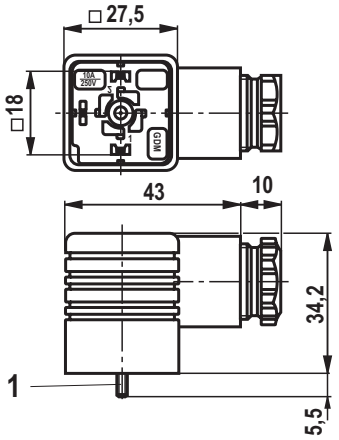

Inductive position transducer

Coil connection

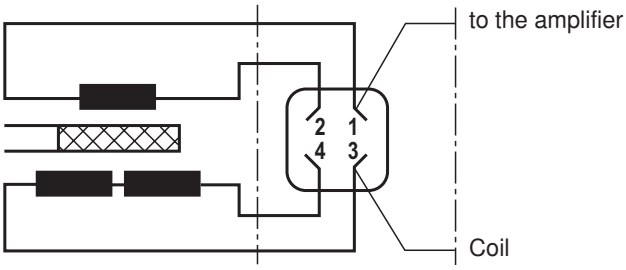

Connection to plug-in connector

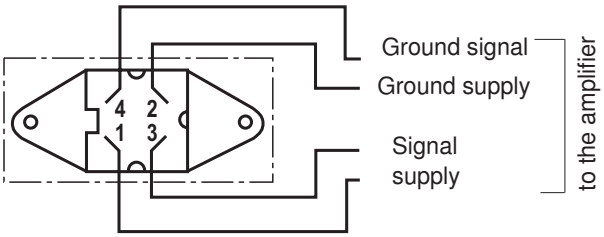

Mating connector 4-pole Pg7-G4W1F
separate order under the Material no. **R900023126**
Connection cable:
Recommendation:
up to 50 m cable length type LiYCY 4 x 0.25 mm^2
Connect shield to PE only on the supply side.

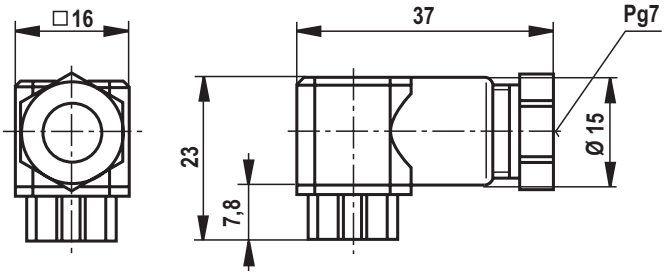

Electrical connection, mating connectors (dimensions in mm)

Type 4WREE (**with** integrated electronics (OBE)

Mating connector according to DIN EN 175201-804
separate order under the Material no. **R900021267** (plastic version)

Angular design – separate order under the Material no. **R900217845**

Pin assignment see also block diagram page 10

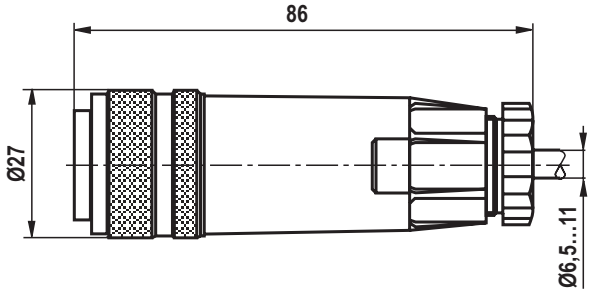

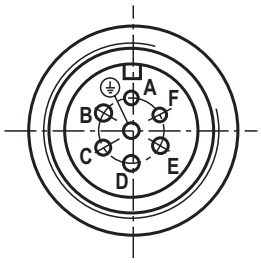

Mating connector according to DIN EN 175201-804
separate order under the Material no. **R900223890** (metal version)

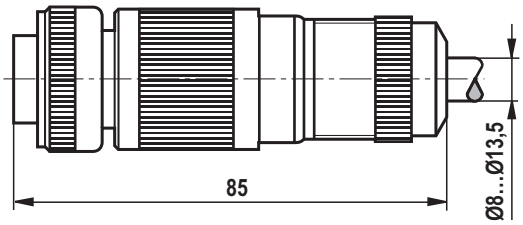

Device connector allocation	Contact	Signal with A1 interface	Signal with F1 interface
Supply voltage	A	24 VDC (u(t) = 19.4 to 35 V); I_{max} = 2 A	
	B	0 V	
Reference potential actual value	C	Reference contact F; R_e > 50 kΩ	Reference contact F; R_e < 10 Ω
Differential amplifier input	D	±10 V command value; R_e > 50 kΩ	4 to 20 mA command value; R_e > 100 Ω
	E	Reference potential command value	
Measuring output (actual value)	F	±10 V actual value (limit load 5 mA)	4 to 20 mA actual value, load resistance max. 300 Ω
	PE	Connected to cooling element and valve housing	

Command value: Positive command value 0 to +10 V (or 12 to 20 mA) at D and reference potential at E result in flow from P → A and B → T.
Negative command value 0 to –10 V (or 12 to 4 mA) at D and reference potential at E result in flow from P → B and A → T.

For valves with 1 solenoid on side a (e. g. variant **EA** and **WA**), a positive command value 0 to +10 V (or 4 to 20 mA) at D and reference potential at E result in flow from P → B and A → T.

Actual value: Actual value 0 to +10 V (or 12 to 20 mA) at F and reference potential at C result in flow from P → A and B → T, actual value 0 to –10 V (or 4 to 12 mA) result in flow from P → B and A → T.

With valves with 1 solenoid, a positive actual value 0 to +10 V (or 4 to 20 mA) at F and reference potential at C result in flow from P → B and A → T.

Connection cable: Recommendation: – up to 25 m cable length type LiYCY 7 x 0.75 mm²
– up to 50 m cable length type LiYCY 7 x 1.0 mm²

External diameter see sketch of mating connector

Connect shield to PE only on the supply side.

Integrated electronics (OBE) type 4WREE

Block diagram / pin assignment

Interface	Integrated electronics (OBE)	Valve

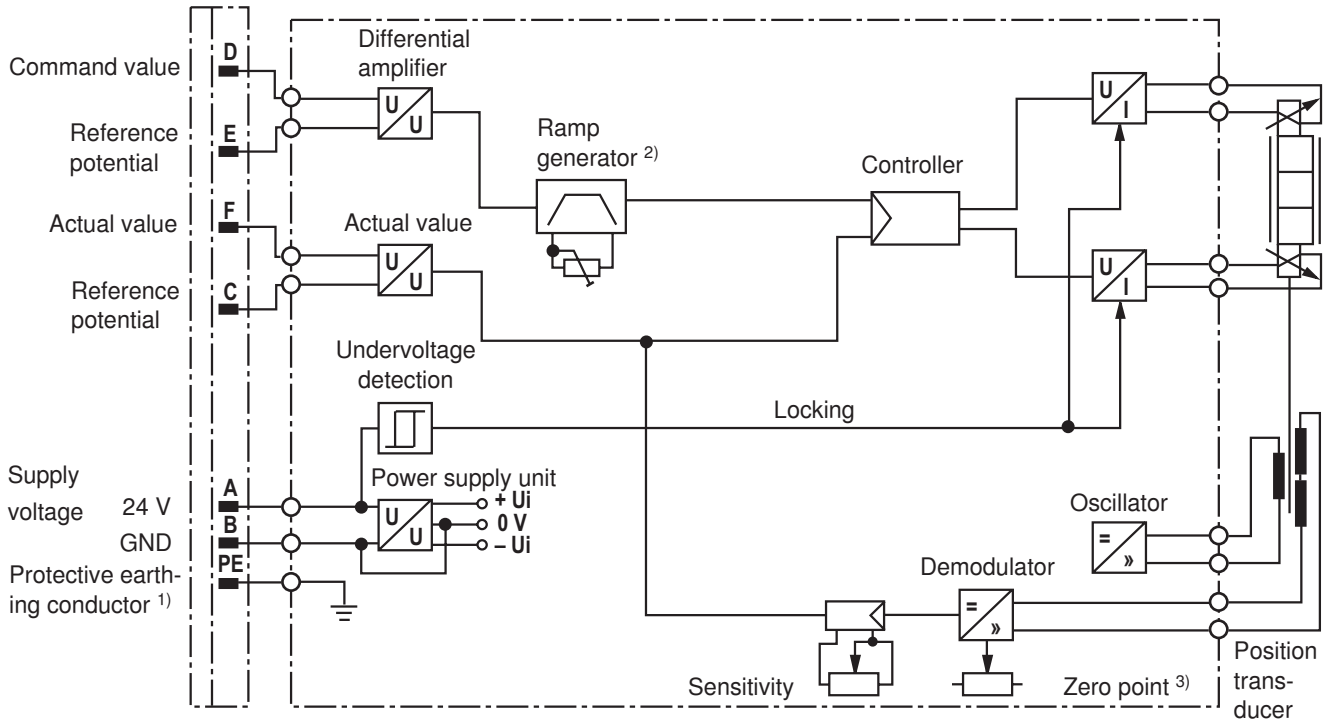

Notice: Electric signals taken out via control electronics (e.g. actual value) must not be used for switching off safety-relevant machine functions!

1) The protective earthing conductor (PE) is connected to cooling element and valve housing!

2) Ramp can be set from 0 to 2.5 s from the outside, identical for T_{up} and T_{down}

3) Zero point can be set from the outside

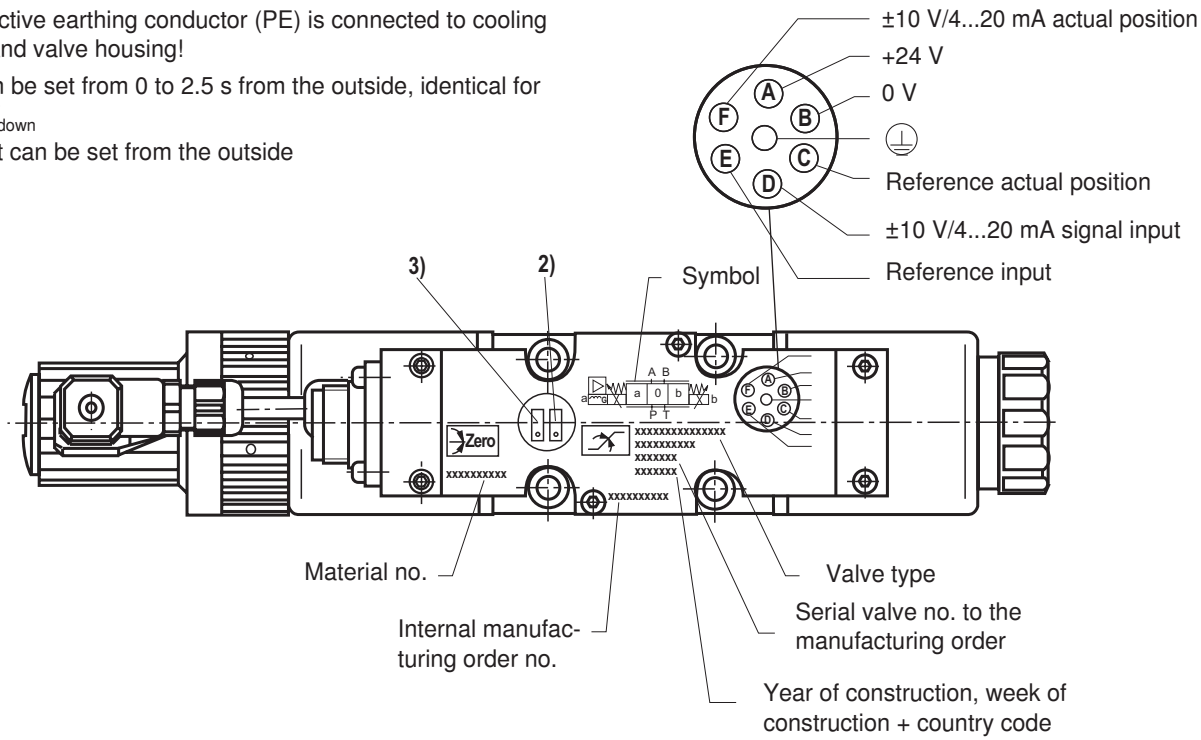

Characteristic curves: Type 4WREE (measured with HLP46, ϑ_{Oil} = 40 °C ± 5 °C) Size 6 and 10

Pressure signal characteristic curve (control spool V),
p_s = 100 bar

Size 6

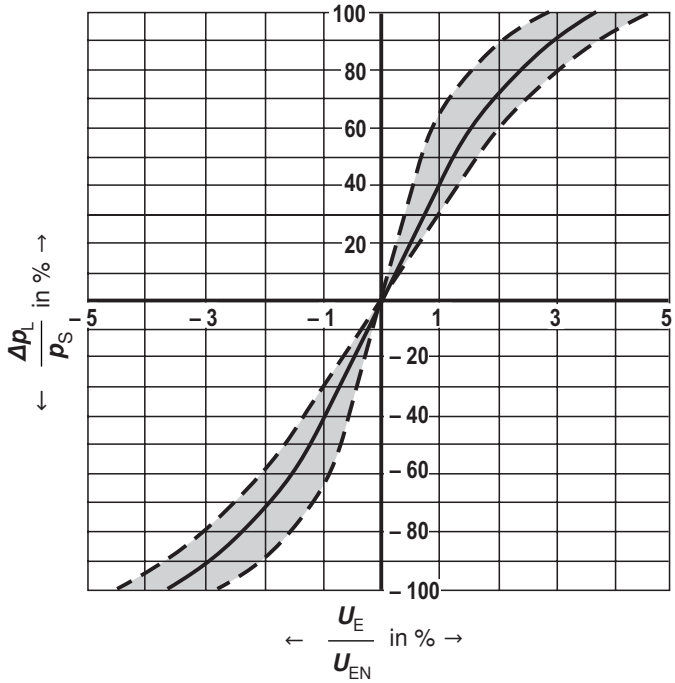

Size 10

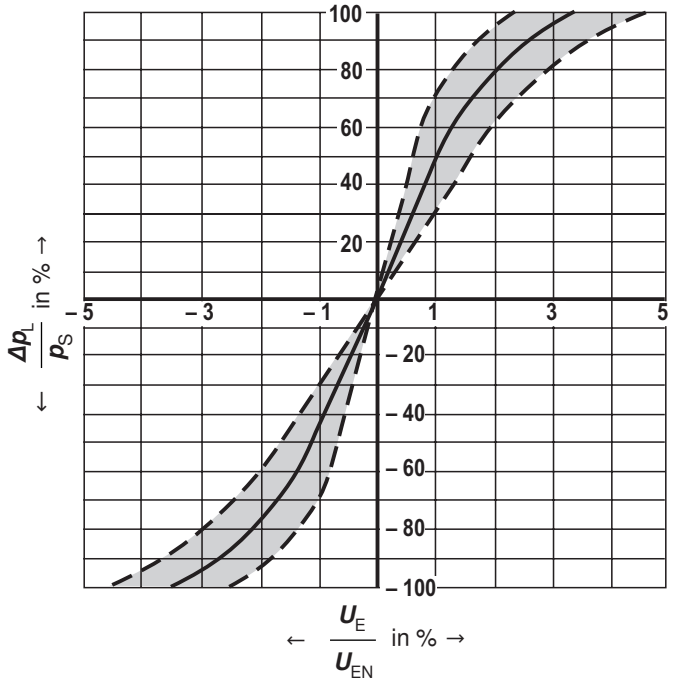

Characteristic curves: Type 4WREE (measured with HLP46, ϑ_{Oil} = 40 °C ± 5 °C) **Size 6 and 10**

Zero flow with central control spool position

Type 4WREE 6 V32

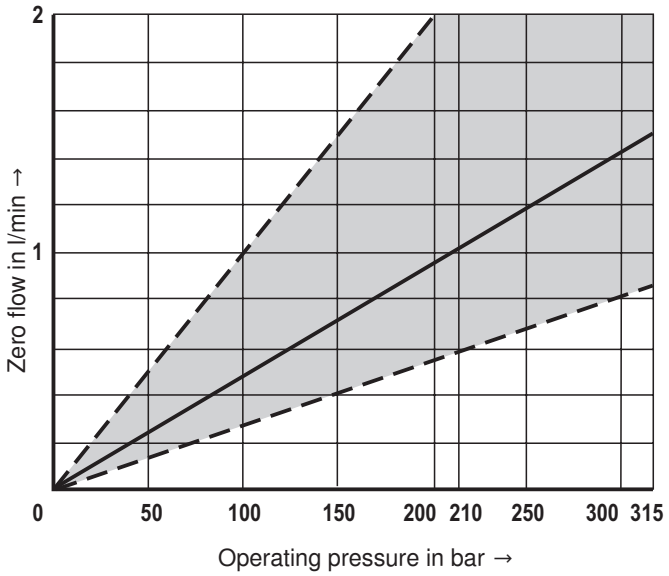

Type 4WREE 10 V75

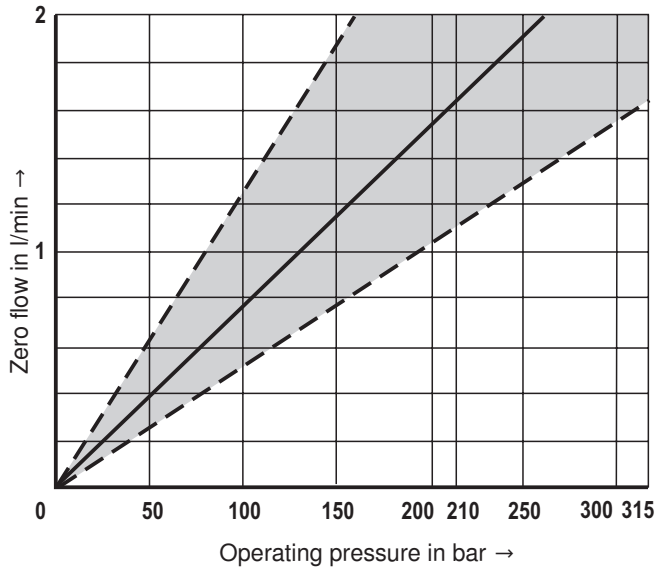

Characteristic curves: Type 4WREE (measured with HLP46, ϑ_{Oil} = 40 °C ± 5 °C and p = 100 bar) **Size 6**

4 l/min rated flow with 10 bar valve pressure differential

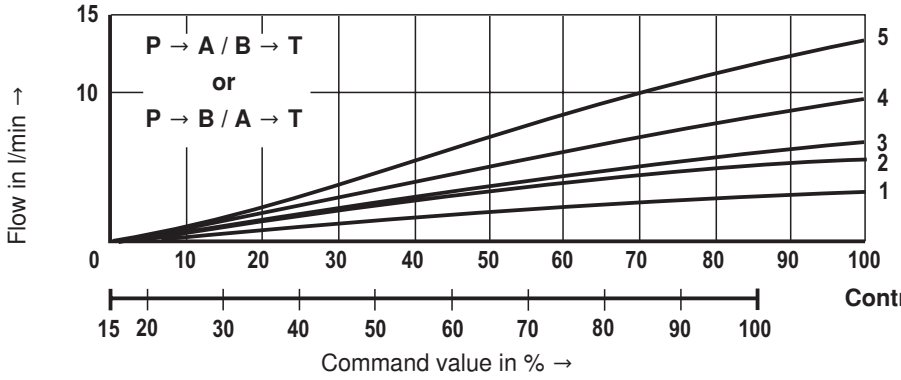

1 ***Δp*** = 10 bar constant
2 ***Δp*** = 20 bar constant
3 ***Δp*** = 30 bar constant
4 ***Δp*** = 50 bar constant
5 ***Δp*** = 100 bar constant

Control spool V

Control spool E- and W

Characteristic curves: Type 4WREE (measured with HLP46, ϑ_{Oil} = 40 °C ± 5 °C and p = 100 bar) Size 6

8 l/min rated flow with 10 bar valve pressure differential

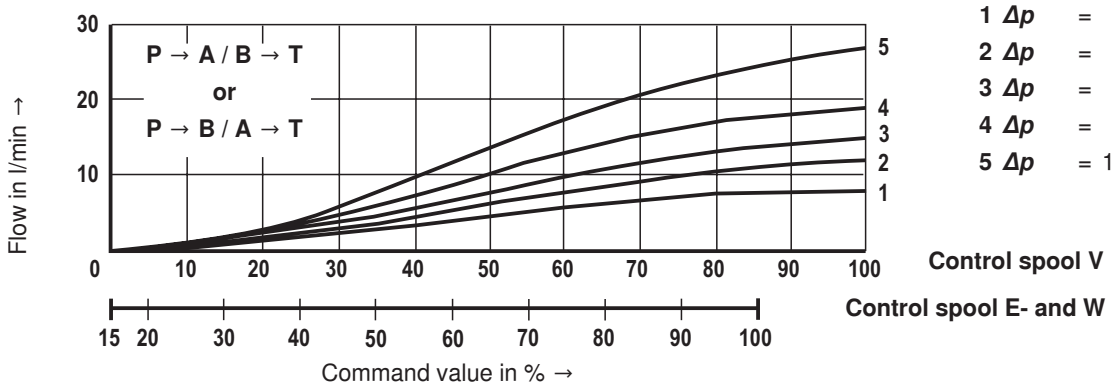

16 l/min rated flow with 10 bar valve pressure differential

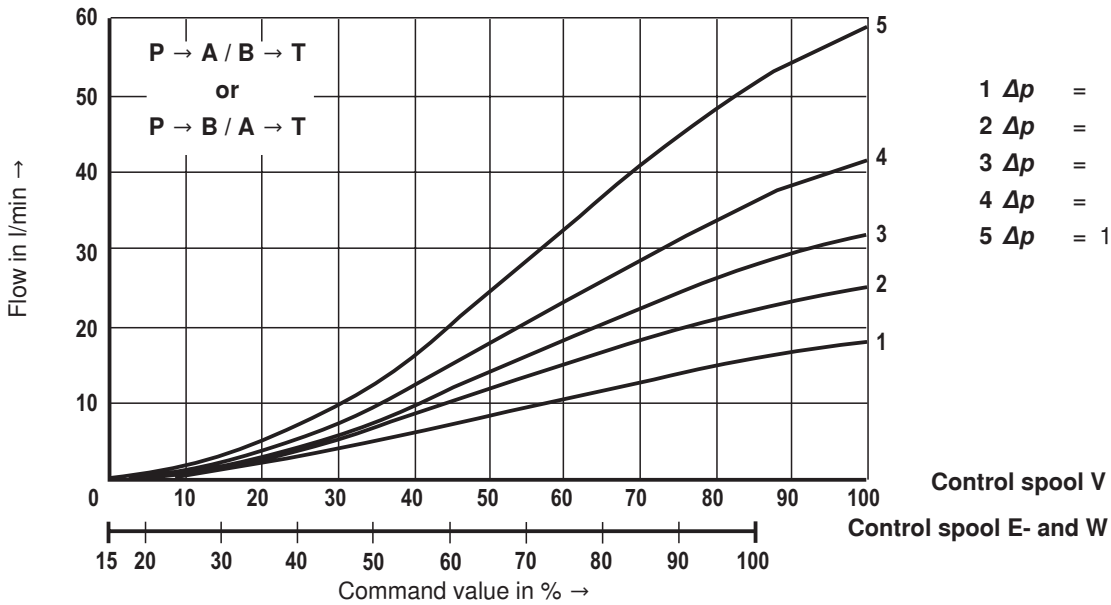

32 l/min rated flow with 10 bar valve pressure differential

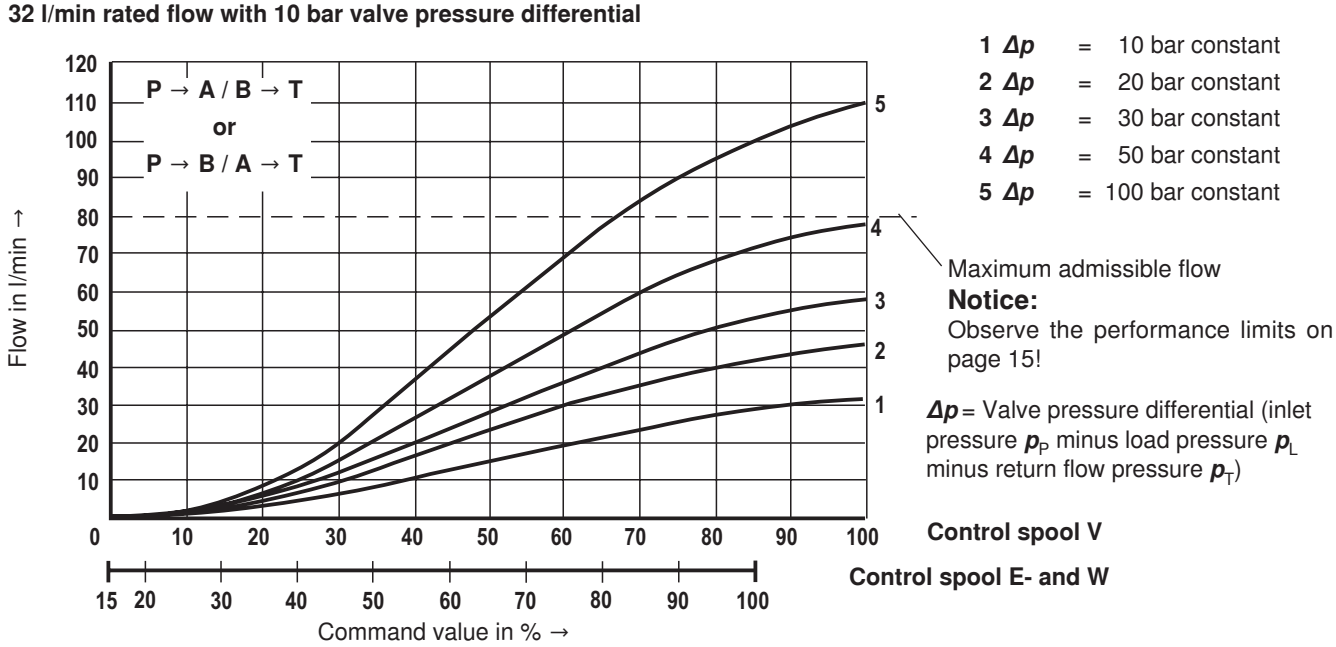

Characteristic curves: Type 4WREE (measured with HLP46, ϑ_{Oil} = 40 °C ± 5 °C and p = 100 bar) **Size 10**

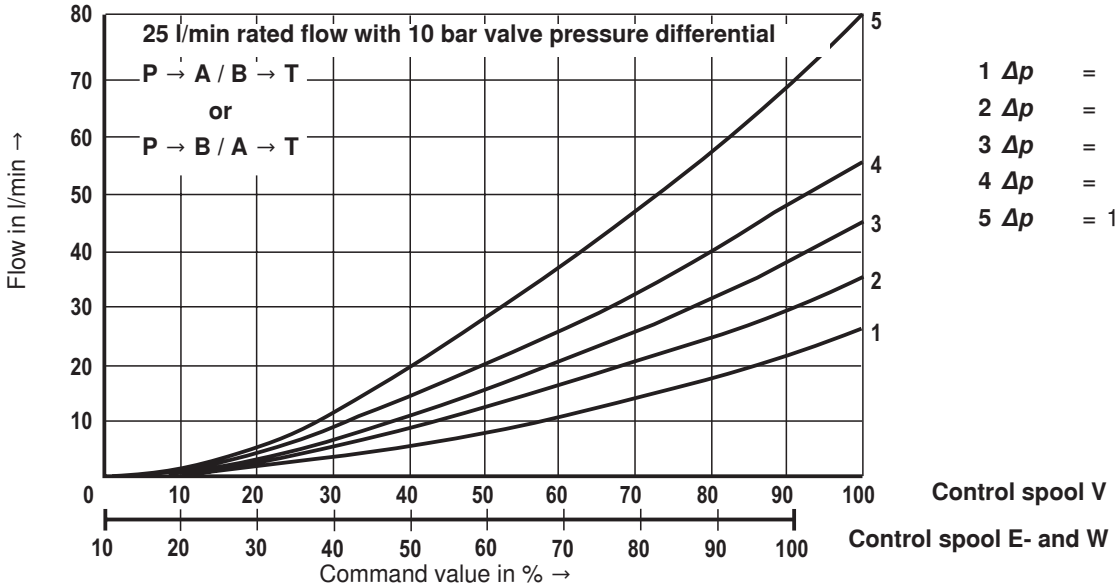

1 ***Δp*** = 10 bar constant
2 ***Δp*** = 20 bar constant
3 ***Δp*** = 30 bar constant
4 ***Δp*** = 50 bar constant
5 ***Δp*** = 100 bar constant

Control spool V
Control spool E- and W

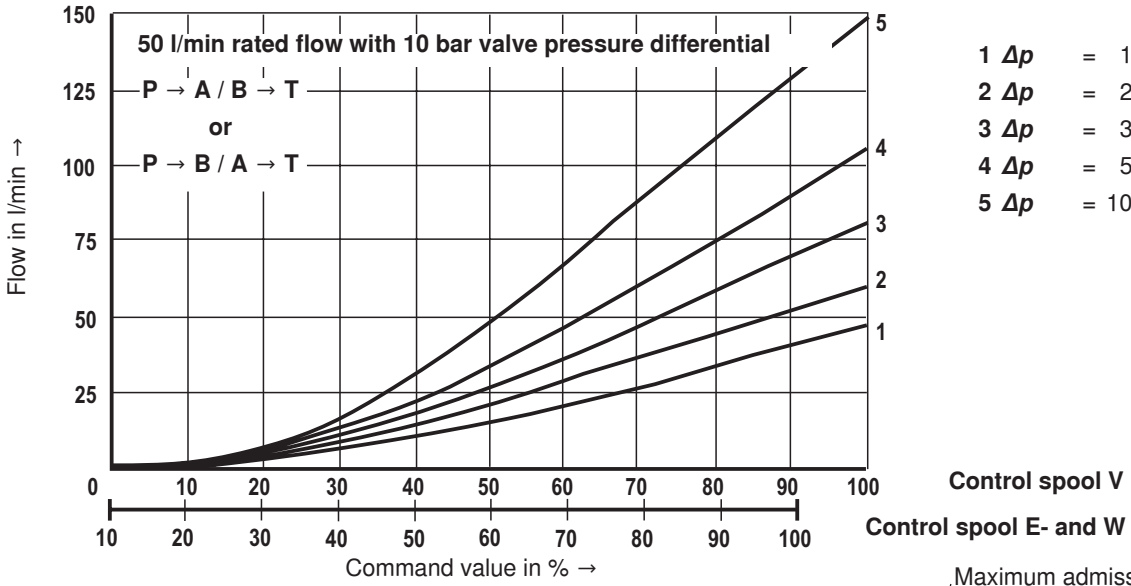

1 ***Δp*** = 10 bar constant
2 ***Δp*** = 20 bar constant
3 ***Δp*** = 30 bar constant
4 ***Δp*** = 50 bar constant
5 ***Δp*** = 100 bar constant

Control spool V
Control spool E- and W

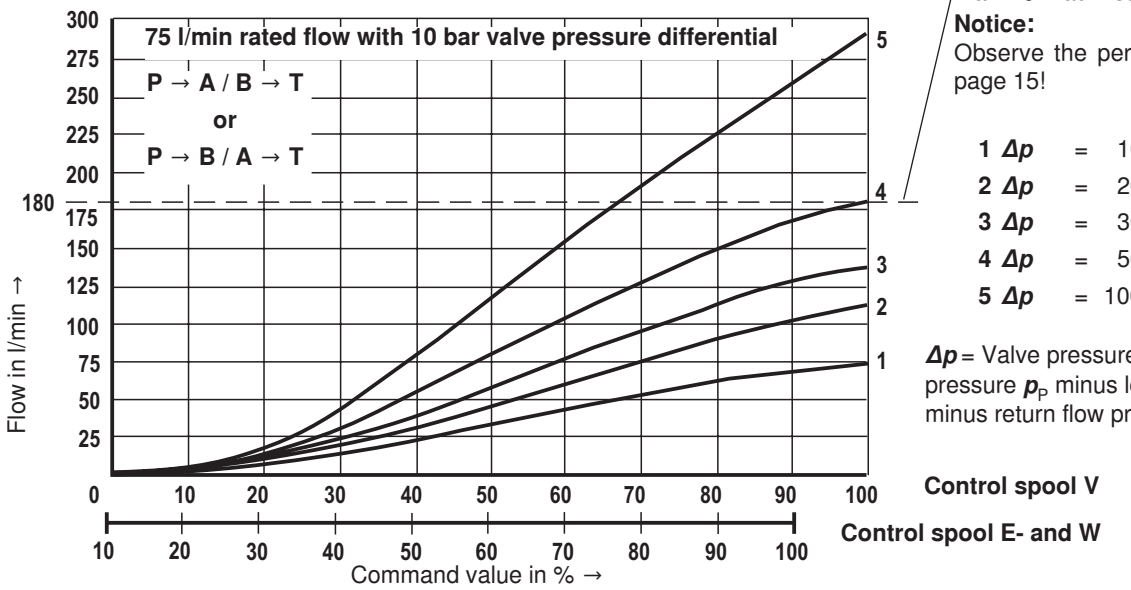

Maximum admissible flow
Notice:
Observe the performance limits on page 15!

1 ***Δp*** = 10 bar constant
2 ***Δp*** = 20 bar constant
3 ***Δp*** = 30 bar constant
4 ***Δp*** = 50 bar constant
5 ***Δp*** = 100 bar constant

Δp = Valve pressure differential (inlet pressure p_P minus load pressure p_L minus return flow pressure p_T)

Control spool V
Control spool E- and W

Transition function with stepped electric input signals: Type 4WREE Size 6

(measured with HLP46, ϑ_{Oil} = 40 °C ± 5 °C and p_s = 10 bar)

4/3 valve version

Control spool E

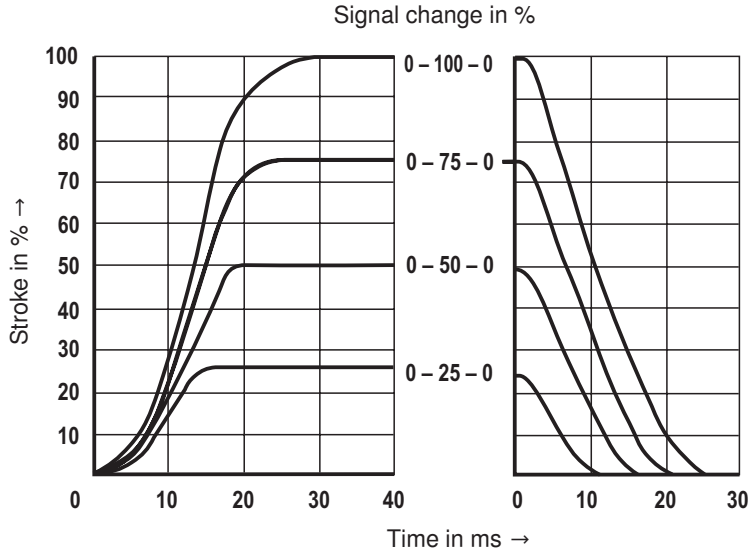

Frequency response characteristic curves: Type 4WREE

(measured with HLP46, ϑ_{Oil} = 40 °C ± 5 °C, p_s = 10 bar) Size 6

4/3 valve version

Control spool V

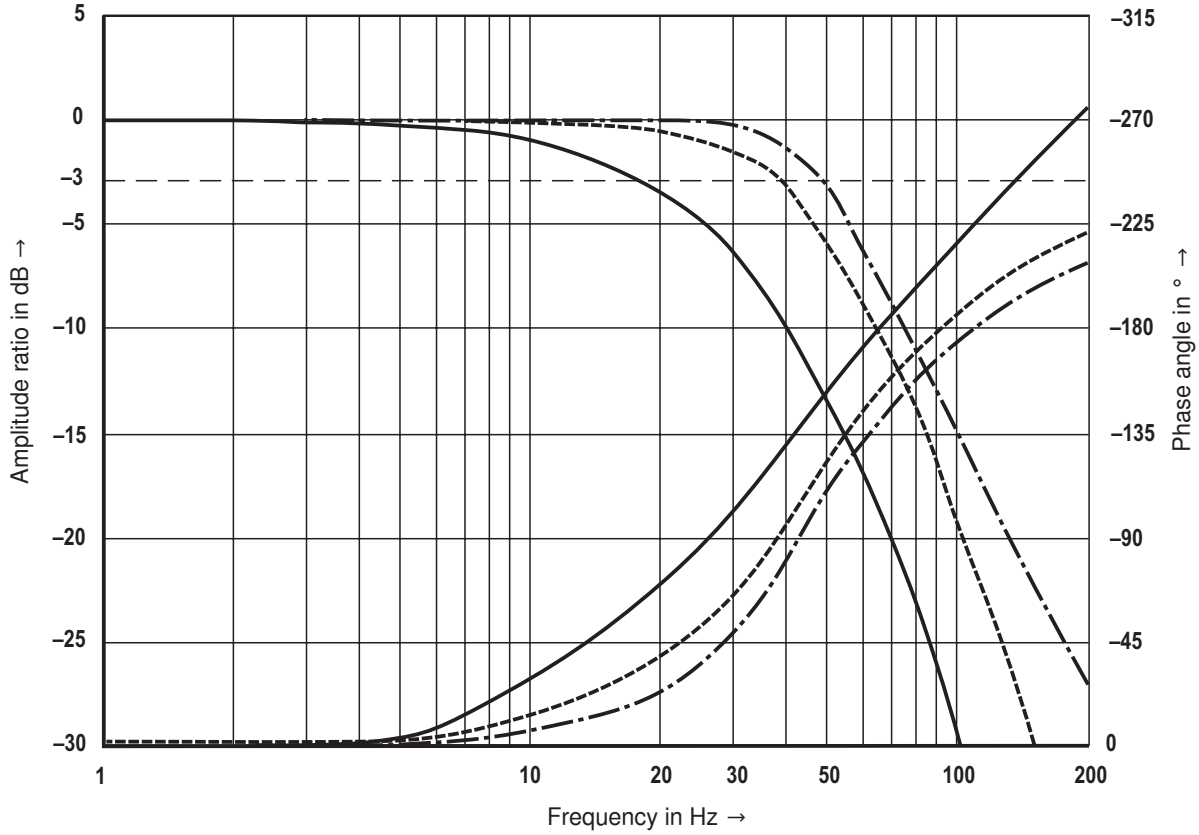

Signal ±10 %

Signal ±25 %

Signal ±100 %

Transition function with stepped electric input signals: Type 4WREE **Size 10**

(measured with HLP46, ϑ_{Oil} = 40 °C ± 5 °C and p_s = 10 bar)

4/3 valve version

Control spool E

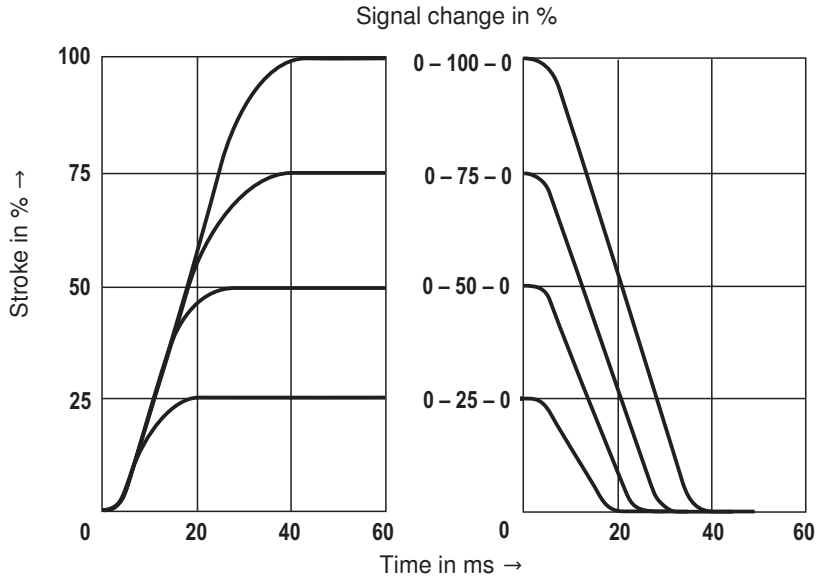

Frequency response characteristic curves: Type 4WREE

(measured with HLP46, ϑ_{Oil} = 40 °C ± 5 °C, p_s = 10 bar) **Size 10**

4/3 valve version

Control spool V

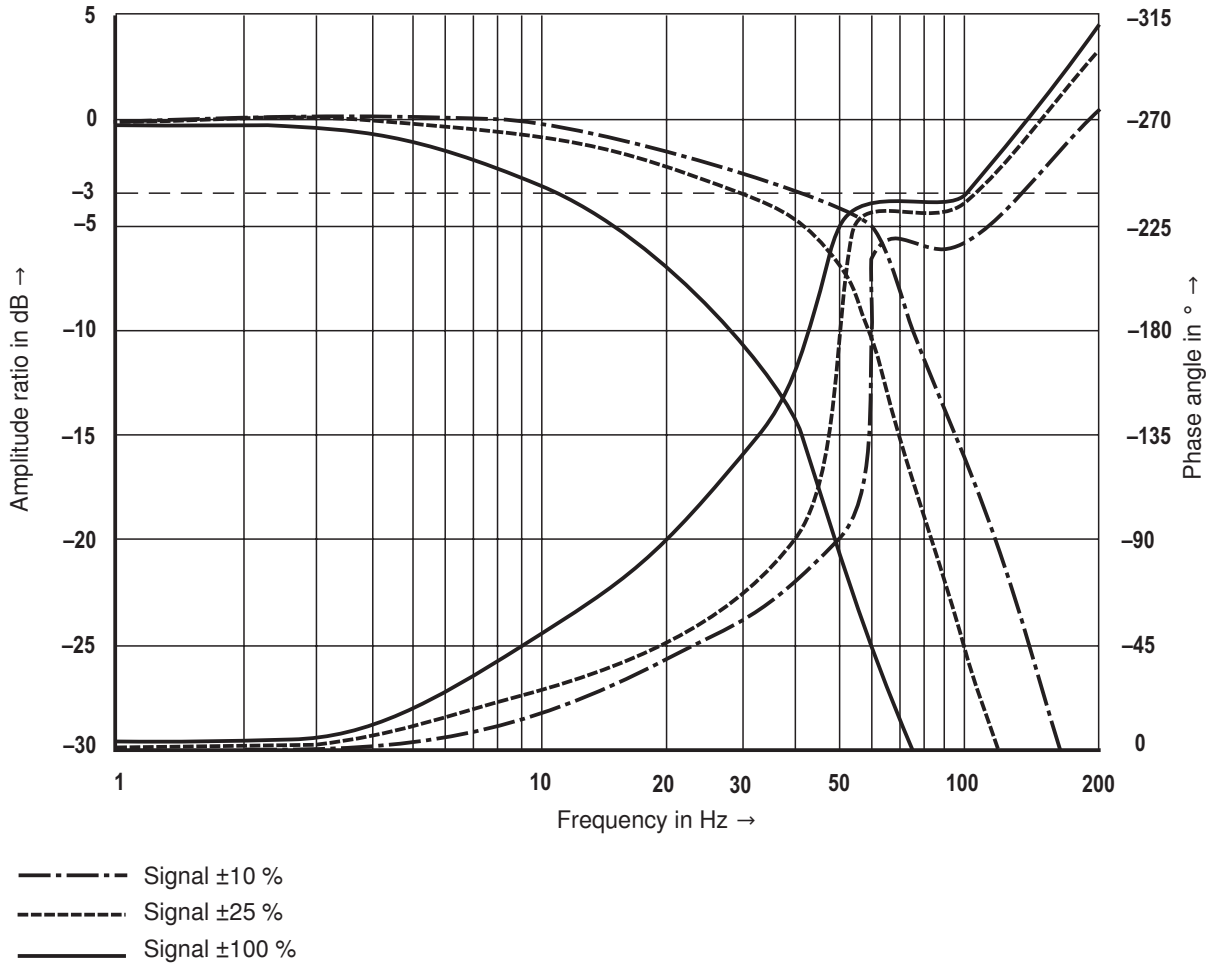

Flow: Type 4WREE (measured with HLP46, ϑ_{Oil} = 40 °C ± 5 °C) Size 6

Load function with maximum valve opening
Rated flow 4, 8, 16 and 32 l/min
Control spool V

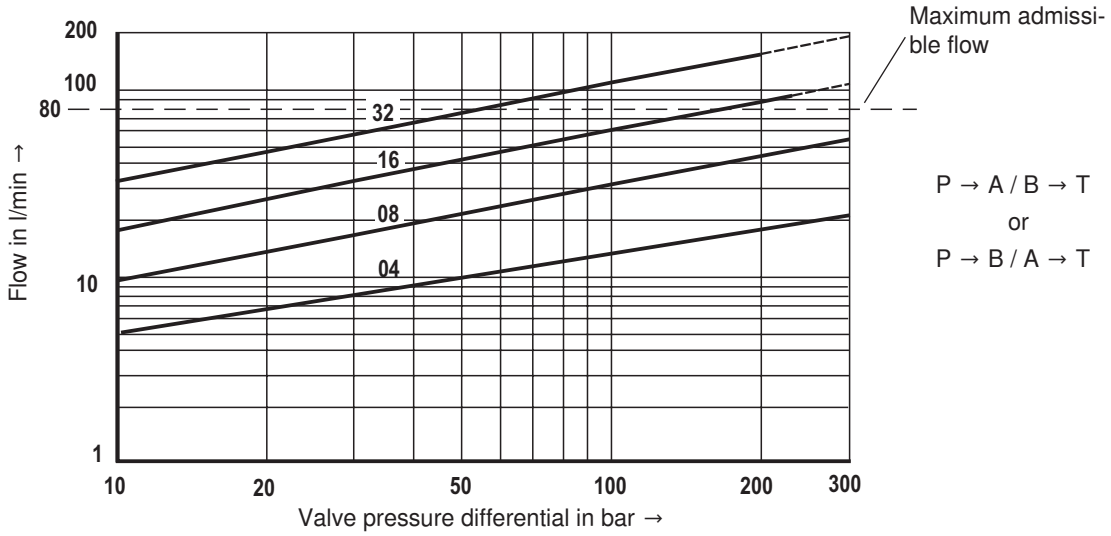

Observe the maximum admissible flow of 80 l/min!

Flow: Type 4WREE (measured with HLP46, ϑ_{Oil} = 40 °C ± 5 °C) Size 10

Load function with maximum valve opening
Rated flow 25, 50 and 75 l/min
Control spool V

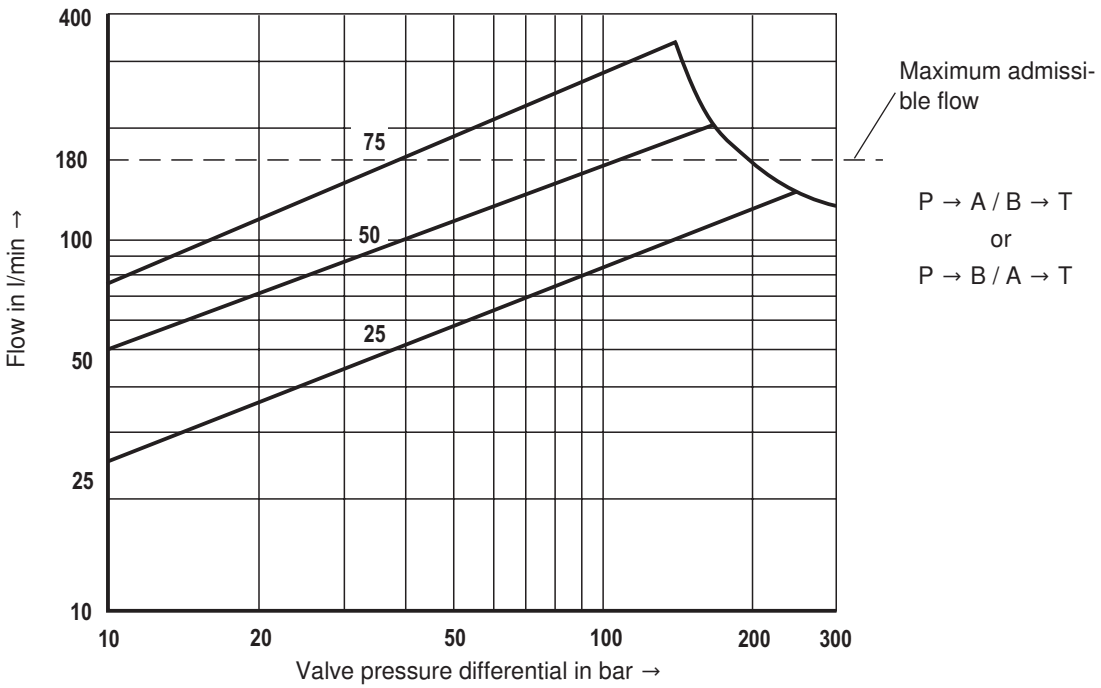

Observe the maximum admissible flow of 180 l/min!

Unit dimensions: Type 4WRE (dimensions in mm) **Size 6**

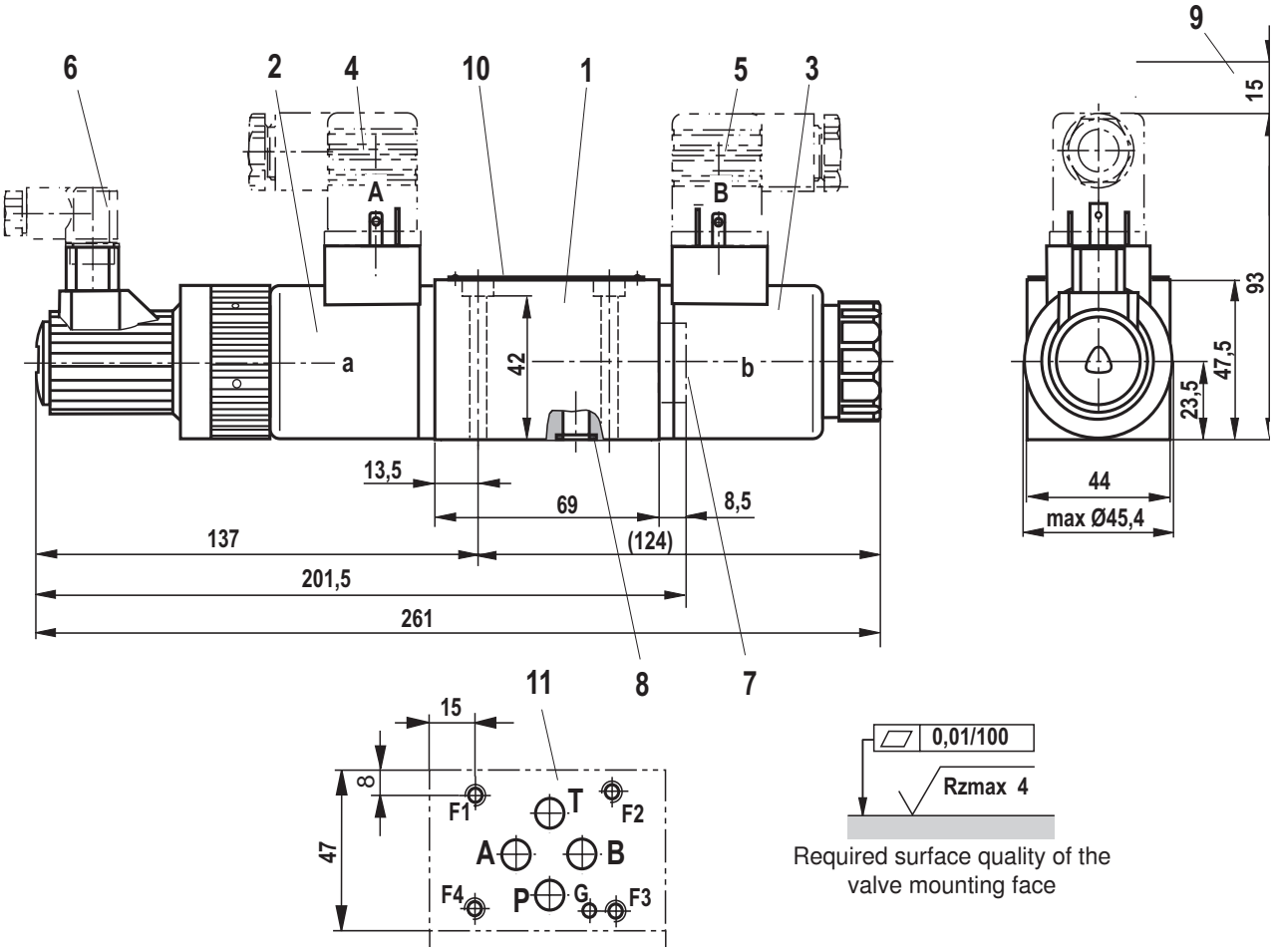

Required surface quality of the valve mounting face

1 Valve housing
2 Proportional solenoid "a" with inductive position transducer
3 Proportional solenoid "b"
4 Mating connector "A", color gray,
separate order – see page 8
5 Mating connector "B", color black,
separate order – see page 8
6 Mating connector for inductive position transducer,
separate order – see page 8
7 Plug screw for valve with one solenoid
(2 spool positions, version **EA** or **WA**)
8 Identical seal rings for ports A, B, P, and T
9 Space required to remove the mating connector
10 Name plate
11 Machined valve mounting face,
porting pattern according to ISO 4401-03-02-0-05
(**with** locating hole)
Deviating from the standard:
- without locating hole "G"
- Ports P, A, B and T with Ø 8 mm

Subplates and valve mounting screws see page 22

Unit dimensions: Type 4WREE (dimensions in mm) Size 6

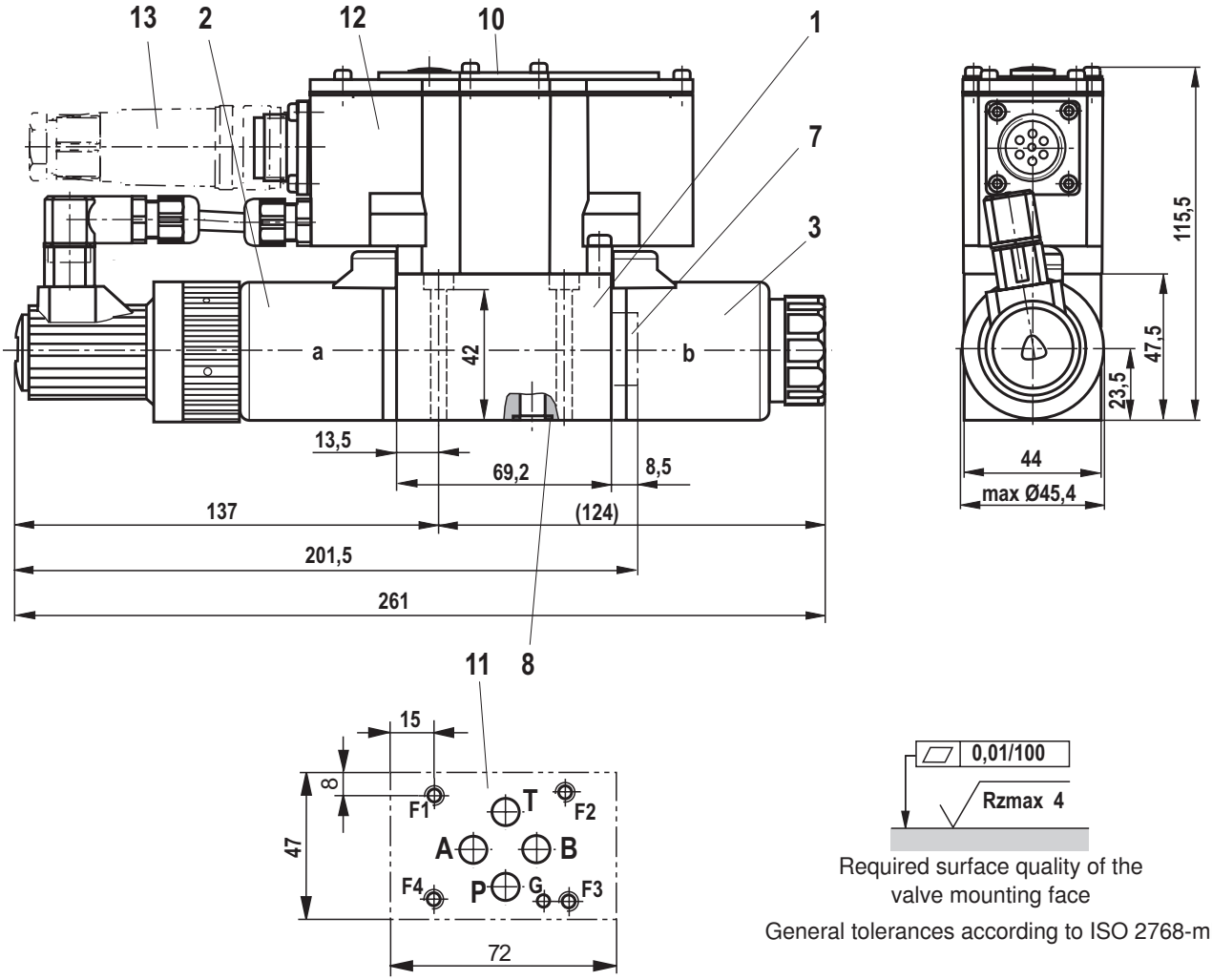

Required surface quality of the valve mounting face

General tolerances according to ISO 2768-mK

1 Valve housing

2 Proportional solenoid "a" with inductive position transducer

3 Proportional solenoid "b"

7 Plug screw for valve with one solenoid (2 spool positions, version **EA** or **WA**)

8 Identical seal rings for ports A, B, P, and T

10 Name plate

11 Machined valve mounting face, porting pattern according to ISO 4401-03-02-0-05 (**with** locating hole)
Deviating from the standard:
- without locating hole "G"
- Ports P, A, B and T with Ø 8 mm

12 Integrated electronics (OBE)

13 Mating connector, separate order – see page 9

Subplates and valve mounting screws see page 22

Unit dimensions: Type 4WRE (dimensions in mm) Size 10

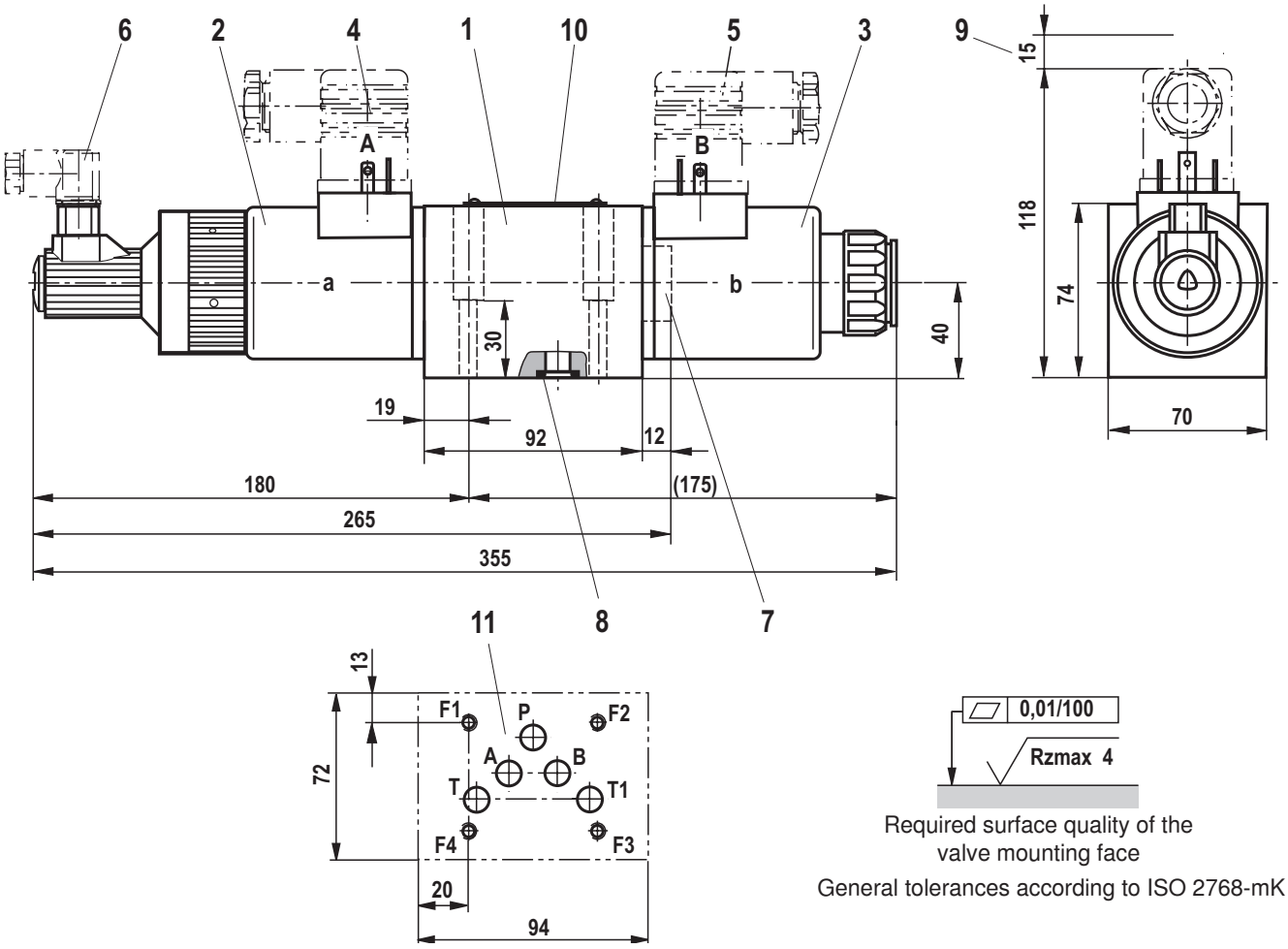

Required surface quality of the valve mounting face

General tolerances according to ISO 2768-mK

1 Valve housing
2 Proportional solenoid "a" with inductive position transducer
3 Proportional solenoid "b"
4 Mating connector "A", color gray, separate order – see page 8
5 Mating connector "B", color black, separate order – see page 8
6 Mating connector for inductive position transducer, separate order – see page 8
7 Plug screw for valve with one solenoid (2 spool positions, version **EA** or **WA**)
8 Identical seal rings for ports A, B, P, T and T1
9 Space required to remove the mating connector
10 Name plate
11 Machined valve contact surface, porting pattern according to ISO 4401-05-04-0-05 differing from the standard: Connection T1 Ø 11.2 mm

Subplates and valve mounting screws see page 22

Unit dimensions: Type 4WREE (dimensions in mm) size 10

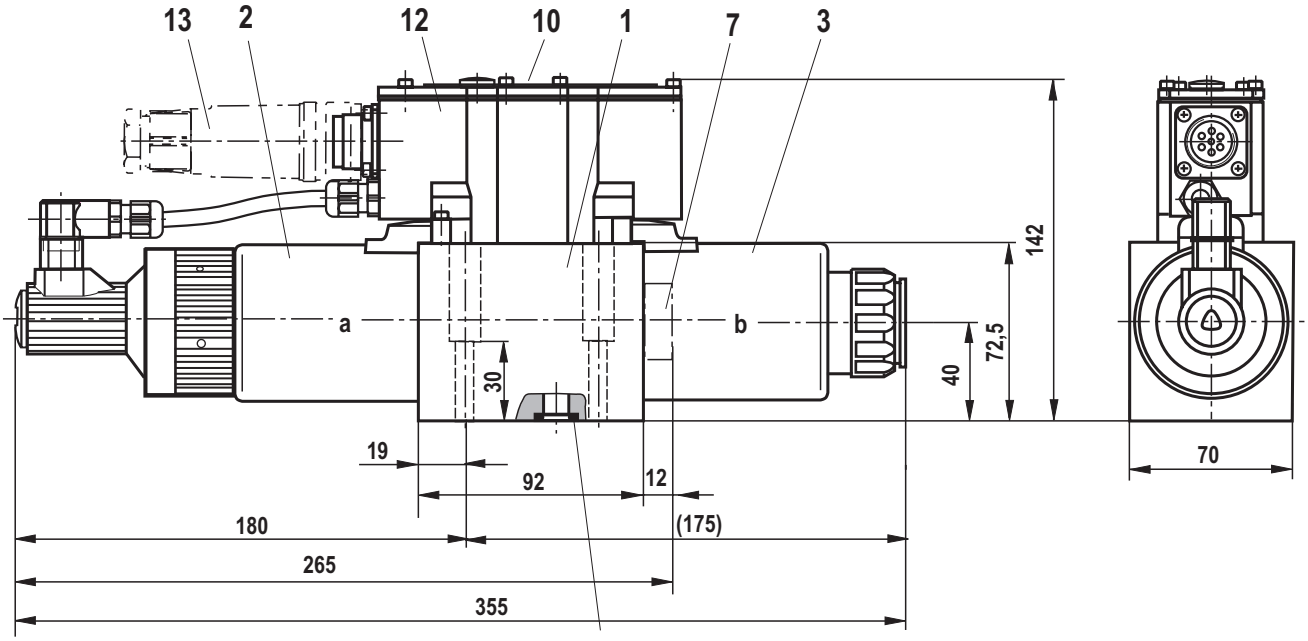

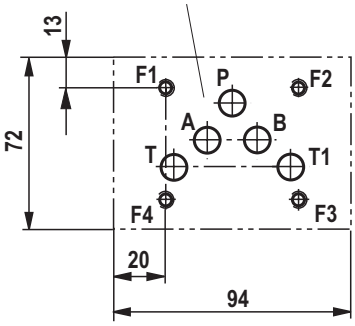

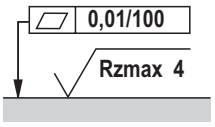

Required surface quality of the valve mounting face

General tolerances according to ISO 2768-mK

1 Valve housing
2 Proportional solenoid "a" with inductive position transducer
3 Proportional solenoid "b"
7 Plug screw for valve with one solenoid (2 spool positions, version **EA** or **WA**)
8 Identical seal rings for ports A, B, P, T and T1
10 Name plate
11 Machined valve contact surface, porting pattern according to ISO 4401-05-04-0-05 differing from the standard: Connection T1 Ø 11.2 mm
12 Integrated electronics (OBE)
13 Mating connector, separate order – see page 9

Subplates and valve mounting screws see page 22

Unit dimensions

Hexagon socket head cap screws		Material number
Size 6	4x ISO 4762 - M5 x 50 - 10.9-flZn-240h-L Tightening torque M_A = 7 Nm ±10 % or 4x ISO 4762 - M5 x 50 - 10.9 Tightening torque M_A = 8.9 Nm ±10 %	R913000064
Size 10	4x ISO 4762 - M6 x 40 - 10.9-flZn-240h-L Tightening torque M_A = 12.5 Nm ±10 % or 4x ISO 4762 - M6 x 40 - 10.9 Tightening torque M_A = 15.5 Nm ±10 %	R913000058

Notice: This tightening torque of the hexagon socket head cap screws refers to the maximum operating pressure!

Subplates	Data sheet
Size 6	45052
Size 10	45054

Bosch Rexroth AG
Hydraulics
Zum Eisengießer 1
97816 Lohr am Main, Germany
Phone +49 (0) 93 52 / 18-0
documentation@boschrexroth.de
www.boschrexroth.de

Bosch Rexroth AG
Hydraulics
Zum Eisengießer 1
97816 Lohr am Main, Germany
Phone +49 (0) 93 52 / 18-0
documentation@boschrexroth.de
www.boschrexroth.de

Bosch Rexroth AG
Hydraulics
Zum Eisengießer 1
97816 Lohr am Main, Germany
Phone +49 (0) 93 52 / 18-0
documentation@boschrexroth.de
www.boschrexroth.de